NATIONAL RAILROAD PASSENGER CORPORATION
60 Massachusetts Avenue, NE, Washington, DC 20002
Tel 202 906.3867 fax 202 906.3865

Joe McHugh
Vice President, Government Affairs
and Corporate Communications

May 11, 2012

Honorable Ray H. LaHood
Secretary
U.S. Department of Transportation
1200 New Jersey Avenue, SE
Washington, DC 20590

Honorable Jonathan M. Young
Chairman
National Council on Disability
1331 F Street, Suite 850
Washington, DC 20004

Honorable John Mica
Chairman
Committee on Transportation and
and Infrastructure
U.S. House of Representatives
2165 Rayburn House Office Building
Washington, DC 20515

Honorable Nick J. Rahall, II
Ranking Member
Committee on Transportation and
and Infrastructure
U.S. House of Representatives
2163 Rayburn House Office Building
Washington, DC 20515

Honorable John D. Rockefeller, IV
Chairman
Committee on Commerce, Science
and Transportation
United States Senate
254 Russell Senate Office Building
Washington, DC 20510

Honorable Kay Bailey Hutchison
Ranking Member
Committee on Commerce, Science
and Transportation
United States Senate
560 Dirksen Senate Office Building
Washington, DC 20510

Dear Secretary LaHood, Chairman Young, Chairmen Mica and Rockefeller and Ranking Members Rahall and Hutchison:

In accordance with the requirements of P.L. 110-432, Division B, Section 219, a copy of which is attached as Appendix 1, the following is an update on Amtrak's Accessible Stations Development Program (ASDP), after the U.S. Department of Transportation (USDOT) promulgated a Final Rule (Rule) on level boarding in September 2011. Amtrak is committed to ensuring that station components for which Amtrak is responsible comply with the Americans with Disabilities Act (ADA), and to the larger mission of ensuring that our trains are accessible to all Americans. This mission has remained unchanged, although the federal requirements have changed with the recent promulgation of the USDOT Rule on level boarding. This Rule, which USDOT has since clarified by the issuance of guidance documents, will result in additional, substantial changes to Amtrak's planned work program at numerous stations.

These changes will expand the necessary scope of work at many stations and, as a result, the ASDP will take longer and cost more. The extent to which the rule will lengthen the program and increase its costs is yet unclear due to the complexities discussed below. Nevertheless, Amtrak remains committed to our broader goal of ensuring accessibility and will keep stakeholders apprised as such details become known.[1]

Background on the Rule

Because the Rule, as clarified by December and March guidance documents, requires Amtrak to evaluate the unique characteristics of each station in the ASDP program (nearly 400) in order to determine how to comply with the new ADA boarding and platform requirements at that station, the publication of the Rule and guidance documents has necessarily had an impact on the program. Operations at each station are unique, and it has been a significant undertaking to research the various operational considerations at each station (including some information about freight operations to which Amtrak is not directly privy) and evaluate the information for accuracy. Since our last report, work has continued across the Amtrak system, but these regulatory changes have necessitated another close review of our program, and a reevaluation of our overall strategy. These efforts are ongoing, and while progress continues, the process of ensuring compliance is now far more complicated.

Prior to the promulgation of the Rule in September, Amtrak was energetically pursuing a compliance program that, with regard to platform accessibility, focused primarily on the use of station-based mobile lifts for individuals who use wheeled mobility devices from low-level platforms since the majority of station platforms used by Amtrak are owned by freight railroads, which generally have not permitted platforms higher than 8 inches above top of rail. A master schedule was developed to address 397 stations by the close of FY15, and design work was underway at 100 stations in FY11. Amtrak expected to complete work at 110 stations in FY12. Although Amtrak continues to pursue its plan, it was and is being necessarily modified, as a result of the Rule that was made "to ensure, at new and altered station platforms, that passengers with disabilities can get on and off any accessible car of the train." Amtrak and

[1] As information, Amtrak's ridership nationally is growing, as is the number of our riders who have a disability. During FY11, we saw a 5.2% increase in riders with disabilities and a 7% increase in revenue among this demographic. In December 2011, we launched a new online booking path, which allows passengers with disabilities to purchase discounted (15% reduction) tickets online. Passengers can also use this new booking path to reserve accessible seats and spaces and make requests for assistance.

commuter rail services are now required to provide "level entry boarding" at new or altered stations "in which no track passing through the station and adjacent to platforms is shared with existing freight rail operations." Moreover, the Rule requires that Amtrak submit detailed reports for Federal Railroad Administration (FRA) approval on every station where it proposes to use any accessible boarding option other than level boarding platforms.

USDOT issued a guidance document in December, clarifying a number of questions that had been raised about the Rule, including a question regarding its effective date. In the guidance, USDOT stated that if a construction contract had been signed, including a commitment to a specific design, before February 1, 2012, then the new Rule would not apply. Among other issues, the guidance document also addressed the continued relevance of the 8-inch minimum platform height, the types of platform alterations that would and would not trigger the Rule and situations where level boarding is not physically feasible.

In March 2012, USDOT issued additional guidance, which clarified the degree to which the volume, nature and proximity in time of freight traffic at a station affects the requirement for level boarding. Specifically, USDOT clarified that only platforms adjacent to tracks that presently carry regular revenue freight traffic are exempt from the level boarding requirement. Therefore, in order to ascertain whether a level boarding platform is required, a freight usage determination must first be made for every track adjacent to every platform at each station. Moreover, a platform is not necessarily exempt from the level boarding requirement on the basis of other types of freight operations on the track (e.g., use by maintenance equipment, rare or token passage of freight trains, storage of ballast cars or parking freight trains overnight) or the fact that a freight railroad might potentially need to use the track in the future. Finally, if the use of the tracks for freight service ceases for a "significant" but still undefined period, level boarding will be required for the platforms adjacent to those tracks.

Impact on Accessible Station Development Program

Under these circumstances, a significant amount of work will have to be done before Amtrak can accurately evaluate the degree to which its compliance plans for stations will have to be altered. Ascertaining the degree, type and frequency of freight usage of the tracks adjacent to the hundreds of platforms served by Amtrak is a time-consuming and difficult task, which is further complicated by the fact that most station platforms are not owned by Amtrak, and therefore, the designs for those platforms must be approved by a third party. Nonetheless, Amtrak is doing everything it can to make the necessary

changes to the ASDP as expeditiously as possible and, to the extent that those changes have already been made or are in process, they are described below.

After the promulgation of the Rule, Amtrak instituted a policy in January 2012 to minimize the use of station-based mobile lifts at stations with annual ridership above 7,500. While the Rule permits station-based mobile lifts as one of several acceptable alternatives to level boarding where a platform is adjacent to a track that is shared with freight rail operations, it also establishes a mandatory performance standard for any boarding option that is chosen. Specifically, individuals with disabilities, including individuals who use wheelchairs, must have access to all accessible cars available to passengers without disabilities, and service to those individuals must be provided in an "integrated, safe, timely and reliable manner." Although this standard can be met through the use of station-based mobile lifts (and, indeed, Amtrak still plans to use that boarding option at many stations), Amtrak has decided that, consistent with the letter and spirit of the Rule, it will simultaneously pursue other boarding alternatives to the extent practicable. Although there has been insufficient time to develop and approve a specific design, this boarding alternative will likely involve some type of setback platform to meet the floor height of the majority of the trains that serve a station.

Amtrak intends to prioritize work at those stations with fewer than 7,500 boardings and alightings annually since the work at these stations will remain largely unchanged from the plans that were in place before the Rule and subsequent guidance were issued. For the vast majority of the stations in this group that share their tracks with freight traffic, level boarding is not required. We will be proceeding with station-based mobile lifts at these stations upon confirming the freight usage details. To continue to make significant progress, the design work for 108 stations that fit this description is proceeding.[2]

Design work is also progressing at twenty additional stations that have been identified as passenger-only stations, which require level boarding per the Rule.[3] Some of these stations already have level boarding platforms, and Amtrak's intent is to ensure that all the other elements in the station meet the applicable standards. Stations on this list, which includes seven of the top 25 busiest stations on the Amtrak system

---

[2] See Appendix 2 for a list of the 108 stations in the ASDP that fall below the 7,500 ridership threshold in FY11.
[3] See Appendix 3 for a list of the 20 stations currently in design served only by passenger trains that either don't already have level boarding or are in need of other accessibility improvements.

will go out for bid between October 2012 and August 2013, pending approval by the host railroads in some cases, and/or availability of sufficient labor. Amtrak is in the process of trying to identify which other platforms at which stations will have to be made into level boarding platforms pursuant to the Rule as clarified by the recent guidance documents. As noted above, once that is done, Amtrak will need to seek and obtain approval from the freight railroads that own the relevant tracks and platforms. Since this is likely to be a time-consuming and difficult process, Amtrak is simultaneously busy ensuring that it continues to make substantial progress on other less complex work.

Near-Term Work

By the end of this fiscal year, Amtrak expects to have completed 57 additional topographic surveys of stations and 57 additional ADA assessments to determine ADA compliance and the scope of work necessary. To date, Amtrak has conducted topographic surveys at 208 stations and ADA assessments at 122 stations.

Our goal is to progress a total of 28 stations to the "issued for bid" milestone in FY 2012, and 10 stations to the "procurement" milestone, which is the point where construction documents are released for solicitation to local contractors who will perform the necessary construction work at stations.[4] We expect to make further progress in FY 2013, with ADA assessments at an additional 35 stations, while an additional 99 stations are issued for bid. Amtrak also expects in this time frame to have an additional 116 stations progress to the procurement stage.[5]

Technical Issues

The solutions we will be using to address boarding needs at these stations will vary. As noted above, those stations that have fewer than 7,500 annual boardings and alightings are often positioned in localities that see substantial amounts of freight traffic. More than 70% of Amtrak's train-miles are run on tracks owned by other railroads, and, therefore, approximately 362 of Amtrak's 500-plus stations are adjacent to tracks that are shared with freight rail traffic. On these lines, the host railroad typically owns the right-of-way and sets the rules on the degree to which lineside infrastructure may encroach on the right-of-way,

---

[4] See Appendix 4 for a list of the 28 stations to be issued for bid in FY12.

[5] See Appendix 5 for a list of the 250 milestones currently planned to be assessed, issued for bid or progressed to the procurement stage in FY13 at 124 stations.

since many freight carriers haul cars that are wider than Amtrak coaches. Depending on the railroad and the situation, the resulting gap between the car and a high level platform could be four feet (or more) in width. These circumstances present difficulties that must be overcome with some feasible solution. Amtrak is currently working to develop solutions to these problems and plans that will allow us to implement them, where necessary.

In many cases, the solution will be complex – further complicated by the variations in equipment type. There is no standard coach height; Amtrak primarily uses equipment that conforms to two broad categories of design – a single level car capable of discharging passengers at a level 48" above the height of the rail, and a bilevel car that discharges passengers at 15" above the level of the rail. The nation's commuter fleets have yet other floor heights, and some Amtrak services use bilevel equipment during cold weather and single level equipment during warm weather. Furthermore, we have swapped single level equipment for bi-level equipment when we have experienced shortages due to wrecks or other damage. For instance, many stations will need two or possibly three different level boarding solutions depending upon what equipment serves the station. All of these variations mean that there is no uniform fix.

For stations with annual ridership above 7,500 that do not currently have level boarding, and that will not be required to have level boarding under the Rule, our new policy is to minimize the use of station-based mobile lifts. Though a final design is not yet in place, the graphics below show examples of setback platforms that could be designed for stations that are primarily served by bi-level equipment (typically, though not exclusively in the West) and single-level equipment (typically, though not exclusively in the East). This type of platform would allow all of our passengers, including those who use wheeled mobility devices, to access our trains in the same manner, without having to use stairs or lifts.

Figure 1. Set Back Platform Concepts

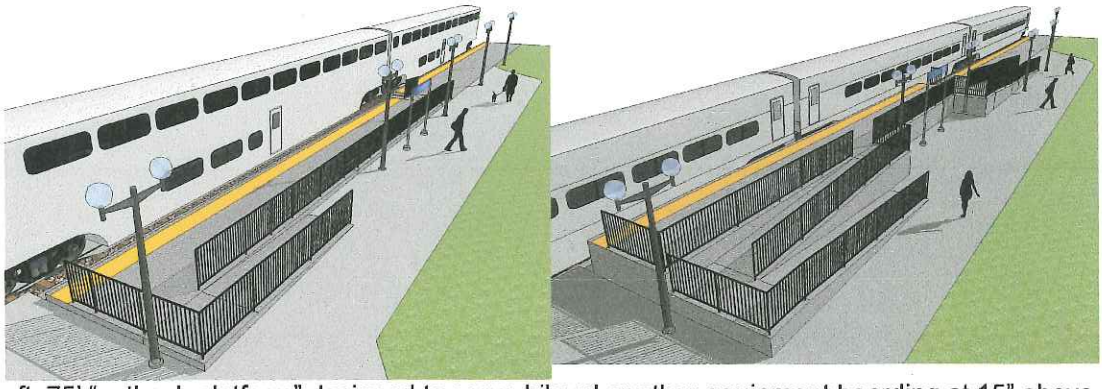

Left: 75' "setback platform" designed to serve bilevel or other equipment boarding at 15" above the rail
Right: 75' "setback platform" designed to serve single level or other equipment boarding at 48" above the rail

For routes that are currently served by bi-level equipment, which is designed to discharge passengers onto platforms that are 15" above the rail, Amtrak is evaluating various 15" setback platform options. For 15" platforms, the host freight railroads require the platforms to be "set back" from the rail by 45 5/8" or 50", leaving a gap between the train and the platform approximately four feet wide. Under these conditions, a bridgeplate or some other gap-crossing solution must be used to allow passengers to safely cross the gap between the setback platform and the car. The same setback requirements exist for platforms that are 48" above the rail, and therefore, a similar solution would be required to serve single-level equipment, which is designed to discharge passengers onto platforms that are 48" above the rail. In the above examples, the length of the proposed setback platforms (75 feet) is approximately ten feet shorter than a standard Amtrak car length, making it relatively easy for a train crew to position cars for quick and safe boarding by passengers.

Figure 2. Clearance Requirements for Various Freight Carriers, and the Gap Effect on Amtrak Equipment

Host Railroad	Setback Clearance for Platform that is 8" ATR	Setback Clearance for Platform that is 15" ATR	Setback Clearance for Platform that is 48" ATR	Resulting Horizontal Gap at 8"	Resulting Horizontal Gap at 15" and 48"		
				Amfleet	Amfleet (1)	Amfleet (2)	Superliner (3)
BNSF	5'-4"	8'-6" (4)	8'-6" (4)	4 1/2"	50 1/8"	42 1/2"	45 5/8"
CN	5'-4"	8'-6"	8'-6"	4 1/2"	50 1/8"	42 1/2"	45 5/8"
CP	5'-4"	8'-6"(4)	8'-6"(4)	4 1/2"	50 1/8"	42 1/2"	45 5/8"
CSXT	5'-4"	8'-6"	8'-6"	4 1/2"	50 1/8"	42 1/2"	45 5/8"
NS	5'-4"	8'-6"	8'-6"	4 1/2"	50 1/8"	42 1/2"	45 5/8"
UP	5'-4"	9'-0"	9'-0"	4 1/2"	56 1/8"	48 1/2"	51 5/8"

Notes:

(1) Gap between platform and bottom step edge
(2) Gap between platform and door threshold
(3) Gap between platform and door edge
(4) State Guidelines govern

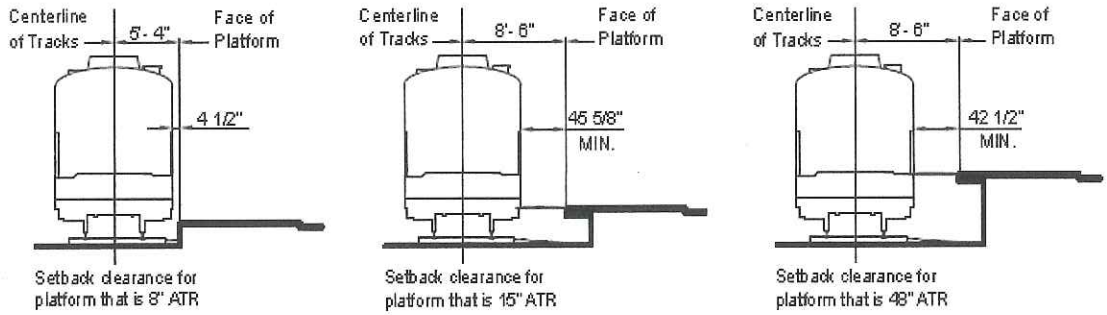

Various solutions are being carefully studied and are under consideration to bridge the gap that will be created by the required freight clearances. In developing a solution to bridge the gap, Amtrak will work closely with the disability community and FRA to ensure that we are consulting relevant stakeholders and providing our passengers with effective and compliant boarding solutions.

To ensure that these communication efforts are effective, Amtrak has continued its program of quarterly meetings to update members of our Board, the disability community, the USDOT, the FRA, and the United States Access Board staff. We also recently hosted a tour of Washington Union Station for Access Board members, as well as staff from USDOT, which allowed them to see the state of various height platforms currently serving a variety of equipment types used by MARC, VRE, and Amtrak. Current boarding techniques including level boarding, car-borne lifts, and station-based mobile lifts were also reviewed.

Conclusion

While the issuance of the Rule and subsequent guidance has created new and different challenges to the program and the organization of the work, the fact that Amtrak had a dedicated cross-departmental group led by three executive committee members allowed us to quickly assess and begin to recast our ASDP. In the coming months, Amtrak expects to continue the ongoing work on designs and strategies to address level boarding and the accompanying gap issue. We will also continue our discussions with the host freight railroads regarding the critical issues that have been raised by the Rule. We will continue to keep the Administration and Congress informed of our progress including highlighting challenges or issues that arise in connection with our ASDP. Despite changes to our program as a result of the Rule, we are continuing with our compliance efforts to the maximum extent feasible and remain dedicated to this most important task of ensuring that our system is fully accessible to travelers with disabilities.

Sincerely,

Joe McHugh
Vice President
Government Affairs and Corporate Communications

Attachments

Appendix 1

P.L. 110-432, Division B, Section 219

STUDY OF COMPLIANCE REQUIREMENTS AT EXISTING INTERCITY RAIL STATIONS

(a) IN GENERAL.—Amtrak, in consultation with station owners and other railroads operating service through the existing stations that it serves, shall evaluate the improvements necessary to make these stations readily accessible to and usable by individuals with disabilities, as required by such section 242(e)(2) of the Americans with Disabilities Act of 1990 (42 U.S.C. 12162(e)(2)). The evaluation shall include, for each applicable station, improvements required to bring it into compliance with the applicable parts of such section 242(e)(2), any potential barriers to achieving compliance, including issues related to passenger rail station platforms, the estimated cost of the improvements necessary, the identification of the responsible person (as defined in section 241(5) of that Act (42 U.S.C. 12161(5))), and the earliest practicable date when such improvements can be made. The evaluation shall also include a detailed plan and schedule for bringing all applicable stations into compliance with the applicable parts of section 242(e)(2) by the 2010 statutory deadline for station accessibility. Amtrak shall submit the evaluation to the Committee on Transportation and Infrastructure of the House of Representatives; the Committee on Commerce, Science, and Transportation of the Senate; the Department of Transportation; and the National Council on Disability by February 1, 2009, along with recommendations for funding the necessary improvements. Should the Department of Transportation issue any rule related to transportation for individuals with disabilities by intercity passenger rail after Amtrak submits its evaluation, Amtrak shall, within 120 days after the date that such rule is published, submit to the above parties a supplemental evaluation on any impact of the rule on its cost and schedule for achieving full compliance.

(b) ACCESSIBILITY IMPROVEMENTS AND BARRIER REMOVAL FOR PEOPLE WITH DISABILITIES.—There are authorized to be appropriated to the Secretary for the use of Amtrak such sums as may be necessary to improve the accessibility of facilities, including rail platforms, and services.

Appendix 2

The following 108 stations have ridership at or below 7,500 and therefore access to the train from the platform for those who use wheeled mobility devices will likely be through station-based mobile lifts.

FY11 Station Ridership Below 7,500 (108)			
Alliance, OH	Dodge City, KS	Lawrence, KS	Rensselaer, IN
Alpine, TX	Dowagiac, MI	Libby, MT	Rockville, MD
Anniston, AL	Dunsmuir, CA	Lodi, CA	Rouses Point, NY
Ashland, KY	Dyer, IN	Malta, MT	Rugby, ND
Bangor, MI	Elko, NV	Maysville, KY	South Shore-South Portsmouth, KY
Barstow, CA	Elyria, OH	McCook, NE	Southern Pines, NC
Beaumont, TX	Ephrata, WA	McGregor, TX	St. Albans, VT
Bellows Falls, VT	Fort Morgan, CO	Michigan City, IN	Stanley, ND
Bingen-White Salmon, WA	Framingham, MA	Mineola, TX	Stanwood, WA
Browning, MT	Gainesville, GA	Montgomery, WV	Staples, MN
Bryan, OH	Gilman, IL	Montpelier, VT	Staunton, VA
Burlington, IA	Glasgow, MT	Okeechobee, FL	Taylor, TX
Camden, SC	Granby, CO	Ontario, CA	Ticonderoga, NY
Castleton, VT	Green River, UT	Palm Springs, CA	Trinidad, CO
Claremont, NH	Hamlet, NC	Pauls Valley, OK	Victorville, CA
Cleburne, TX	Hammond-Whiting, IN	Pittsfield, MA	Walnut Ridge, AR
Clemson, SC	Harpers Ferry, WV	Plano, IL	Waterbury, VT
Clifton Forge, VA	Hastings, NE	Pomona, CA	West Glacier (Belton), MT
Colfax, CA	Helper, UT	Poplar Bluff, MO	Westport, NY
Connellsville, PA	Holdrege, NE	Port Henry, NY	White Sulphur Springs, WV
Connersville, IN	Huntingdon, PA	Port Kent, NY	Whitehall, NY
Creston, IA	Hutchinson, KS	Portage, WI	Windsor, VT
Cut Bank, MT	La Junta, CO	Prince, WV	Winnemucca, NV
Del Rio, TX	Lafayette, LA	Provo, UT	Winslow, AZ
Denmark, SC	Lake Charles, LA	Purcell, OK	Wishram, WA
Detroit Lakes, MN	Lamar, CO	Randolph, VT	Wolf Point, MT
Devils Lake, ND	Las Vegas, NM	Rantoul, IL	Yuma, AZ

Appendix 3

Stations currently in design served only by passenger trains that either don't already have level boarding or are in need of other accessibility improvements.

Passenger Only Platform Stations (20)			
Baltimore – Penn, MD	Lorton (Auto Train), VA	Philadelphia - 30th Street, PA	Sanford (Auto Train), FL
Baltimore/Washington International Thurgood Marshall Airport, MD	Miami, FL	Philadelphia – North, PA	Savannah, GA
Harrisburg, PA	New Carrolton, MD	Port Huron, MI	Syracuse, NY
Jacksonville, FL	New London, CT	Providence, RI	Tampa, FL
Lancaster, PA	Old Saybrook, CT	Route 128, MA	Wilmington, DE

Appendix 4

Stations to be issued for bid in FY12.

FY12 Stations to be Issued for Bid (28)			
Alpine, TX	La Junta, CO	Pomona, CA	Stanley, ND
Bryan, OH	Lancaster, PA	Port Huron, MI	Staunton, VA
Dyer, IN	Lorton (Auto Train), VA	Port Kent, NY	Ticonderoga, NY
Fort Morgan, CO	Michigan City, IN	Prince, WV	Waterbury, VT
Gainesville, GA	Mineola, TX	Randolph, VT	White Sulphur Springs, WV
Green River, UT	Montpelier, VT	Savannah, GA	Whitehall, NY
Huntingdon, PA	Philadelphia – North, PA	St. Albans, VT	Wishram, WA

Appendix 5

In FY13, we expect to complete 250 milestones comprised of ADA assessments, issuing contracts for bid, or proceeding to procurement at the following 124 stations.

FY2013 ASDP Work Plan							
Station	Assessment	Issued For Bid	Start Procurement	Station	Assessment	Issued For Bid	Start Procurement
Alliance, OH		√	√	Del Rio, TX		√	√
Alpine, TX			√	Denmark, SC		√	√
Anniston, AL		√	√	Detroit Lakes, MN		√	√
Ashland, KY	√	√	√	Devils Lake, ND		√	√
Baltimore – Penn, MD		√	√	Dodge City, KS		√	√
Baltimore/Washington International Thurgood Marshall Airport, MD		√	√	Dowagiac, MI	√	√	√
Bangor, MI	√	√	√	Dunsmuir, CA	√	√	√
Barstow, CA		√	√	Elko, NV			√
Beaumont, TX		√	√	Elyria, OH		√	√
Bellows Falls, VT		√	√	Ephrata, WA		√	
Bingen-White Salmon, WA		√		Fort Morgan, CO			√
Boston – North, MA		√	√	Framingham, MA	√	√	√
Browning, MT		√	√	Gainesville, GA			√
Bryan, OH			√	Glasgow, MT		√	√
Burlington, IA		√	√	Granby, CO	√	√	√
Camden, SC		√	√	Green River, UT			√
Castleton, VT		√	√	Hamlet, NC	√	√	√
Claremont, NH		√	√	Hammond-Whiting, IN	√	√	√
Cleburne, TX		√	√	Harrisburg, PA		√	√
Clemson, SC		√	√	Hastings, NE		√	√
Clifton Forge, VA	√	√	√	Helper, UT		√	√
Colfax, CA	√	√	√	Holdrege, NE		√	√
Connellsville, PA	√	√	√	Huntingdon, PA			√
Connersville, IN		√	√	Hutchinson, KS		√	√
Creston, IA		√	√	Jacksonville, FL		√	√
Cut Bank, MT		√	√	Kansas City, MO		√	√

Appendix 5 (Continued)

FY2013 ASDP Work Plan							
Station	Assessment	Issued For Bid	Start Procurement	Station	Assessment	Issued For Bid	Start Procurement
La Junta, CO			√	Pauls Valley, OK	√	√	√
Lafayette, LA		√	√	Philadelphia - 30th Street, PA		√	√
Lake Charles, LA		√	√	Philadelphia – North, PA			√
Lamar, CO	√	√	√	Pittsfield, MA	√	√	√
Lancaster, PA			√	Plano, IL	√	√	√
Las Vegas, NM	√	√	√	Pomona, CA			√
Lawrence, KS		√	√	Poplar Bluff, MO		√	√
Libby, MT		√	√	Port Henry, NY		√	√
Lodi, CA	√	√	√	Port Huron, MI			√
Lorton (Auto Train), FL			√	Portage, WI		√	√
Malta, MT		√	√	Prince, WV			√
Maysville, KY	√	√	√	Princeton Junction, NJ	√		
McCook, NE		√	√	Providence, RI	√	√	√
McGregor, TX		√	√	Provo, UT		√	√
Metropark, NJ	√			Purcell, OK	√	√	√
Miami, FL		√	√	Rantoul, IL		√	√
Mineola, TX			√	Rockville, MD	√	√	√
Montgomery, WV	√	√	√	Rouses Point, NY		√	√
Montpelier, VT			√	Route 128, MA	√	√	√
New Brunswick, NJ	√			Rugby, ND		√	√
New Carrollton, MD		√	√	Sanford (Auto Train), FL		√	√
New London, CT	√	√	√	Savannah, GA			√
Okeechobee, FL		√	√	Seattle – King Street, WA	√		
Old Saybrook, CT	√	√	√	South Shore-South Portsmouth, KY		√	√
Ontario, CA		√	√	Southern Pines, NC	√	√	√
Palm Springs, CA		√	√	Stanley, ND			√

Appendix 5 (Continued)

FY2013 ASDP Work Plan							
Station	Assessment	Issued For Bid	Start Procurement	Station	Assessment	Issued For Bid	Start Procurement
Stanwood, WA		√		West Glacier (Belton), MT		√	√
Staples, MN		√	√	Westport, NY		√	√
Staunton, VA			√	White Sulphur Springs, WV			√
Syracuse, NY	√	√	√	Wilmington, DE		√	√
Tampa, FL		√	√	Windsor, VT		√	√
Taylor, TX		√	√	Winnemucca, NV	√	√	√
Trenton, NJ	√			Winslow, AZ		√	√
Trinidad, CO	√	√	√	Woburn, MA	√	√	√
Victorville, CA		√	√	Wolf Point, MT		√	√
Walnut Ridge, AR		√	√	Yuma, AZ		√	√